Actuator
LD3L

LD3L is a compact actuator equipped with a brushless DC(BLDC) motor. It features a high duty cycle up to 80% and long lifespan, which are two major characteristics different from conventional actuators using brushed PMDC motors. In addition, the dimensions and dynamic performances are basically similar to LD3 actuators. Also LD3L is compatible to most common control boxes that work with LD3 (with brushed DC motors) since it is driven by a default driver board in a separate box.

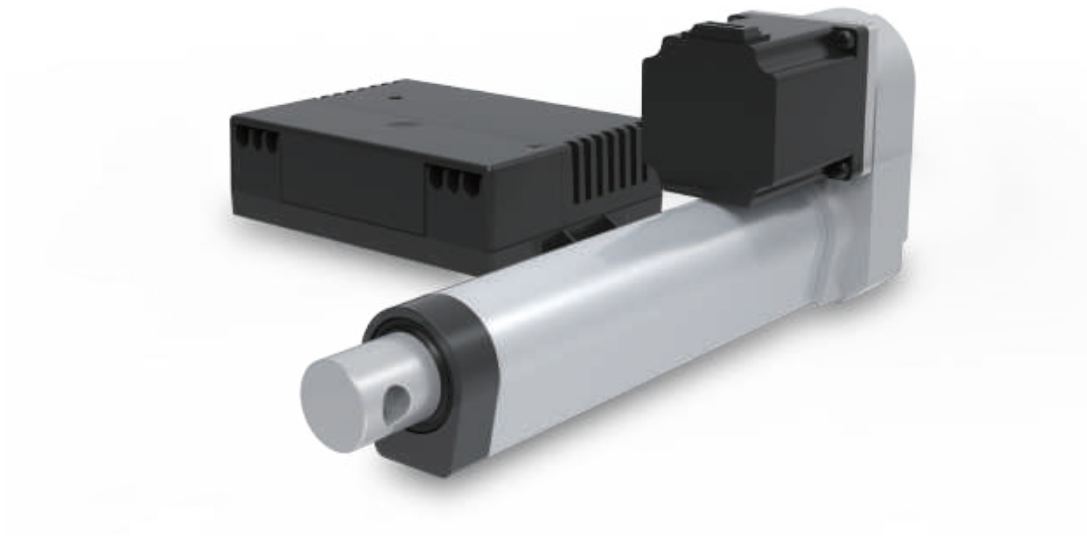

Features

- Main applications: Industrial
- Input voltage: 24～33V DC
- Max. Load: 1000N (push / pull)
- Typical speed at no load: 20.7 mm/sec
- Typical speed at full load: 5.1 mm/sec (1000N load)
- Stroke: 100 / 150 / 200 / 250 / 300 mm
- Noise level: ≦60dB
- IP Level: IP20
- Color: Aluminum grey
- Power cord length: 900mm
- Preset limit switches
- Duty cycle: 80%, max. 16 min. continuous operation in 20 min.
- 30,000 cycles life
- Ambient operation temperature: -25°C ~ +65°C

Performance Data

Model	Input Voltage	Gear Ratio	Push / Pull Max. (N)	*Self-locking force Max. (N)	**Typical Speed (mm/s)		**Typical Current (A)	
					No Load	Full Load	No Load	Full Load
LD3L-2433-**10**-XXX	24	10:1	250	2500	20.7	17.5	0.4	1.3
LD3L-2433-**40**-XXX	24	40:1	1000	2500	5.7	5.1	0.3	1.3

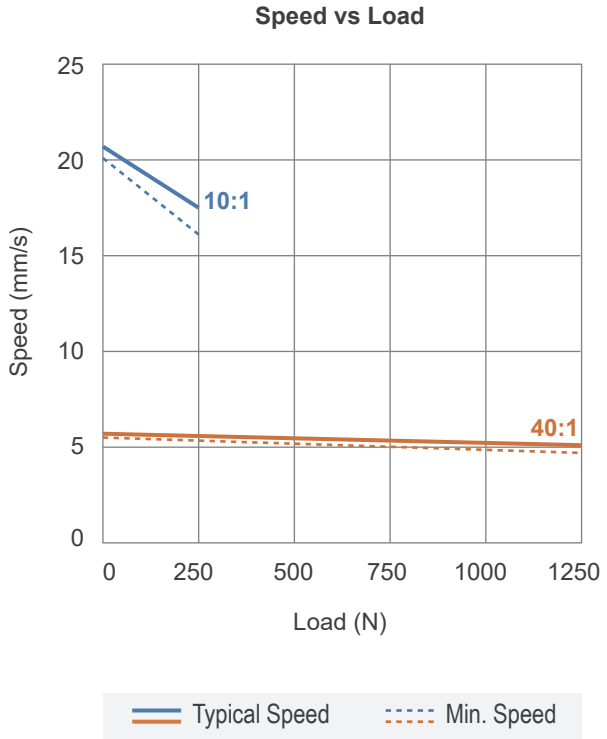

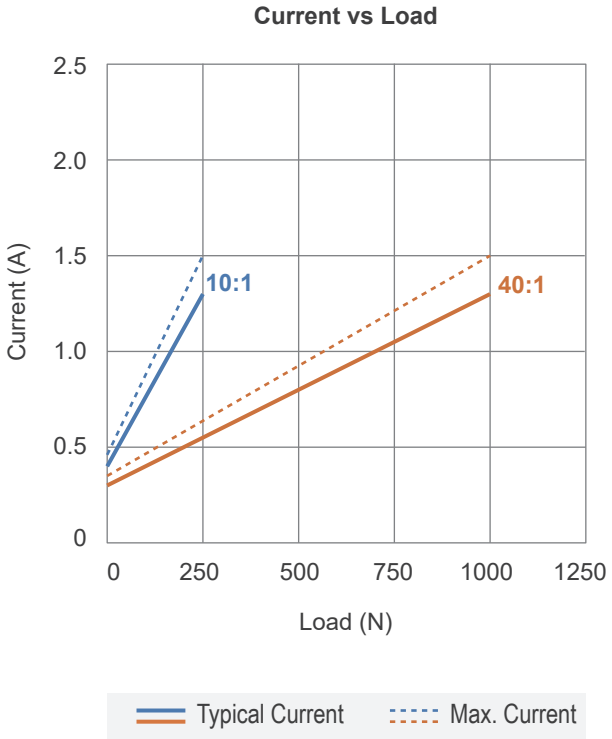

Remarks:

* The self-locking ability is performed by short circuit the motor terminals when the actuator is powered off. All MOTECK compatible control boxes are designed with this feature. Mechanical brake in push direction is available upon request, to further enhance the self-locking ability to maximum load.

** The typical speed or typical current means the average value neither upper limit nor lower limit. The performance curves are made with typical values.

Dimensions

● **Driver box**

Unit: mm

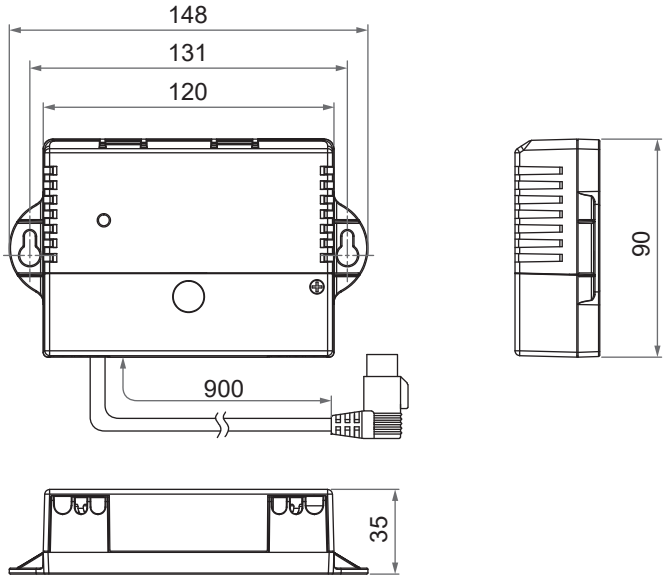

● **Actuator**

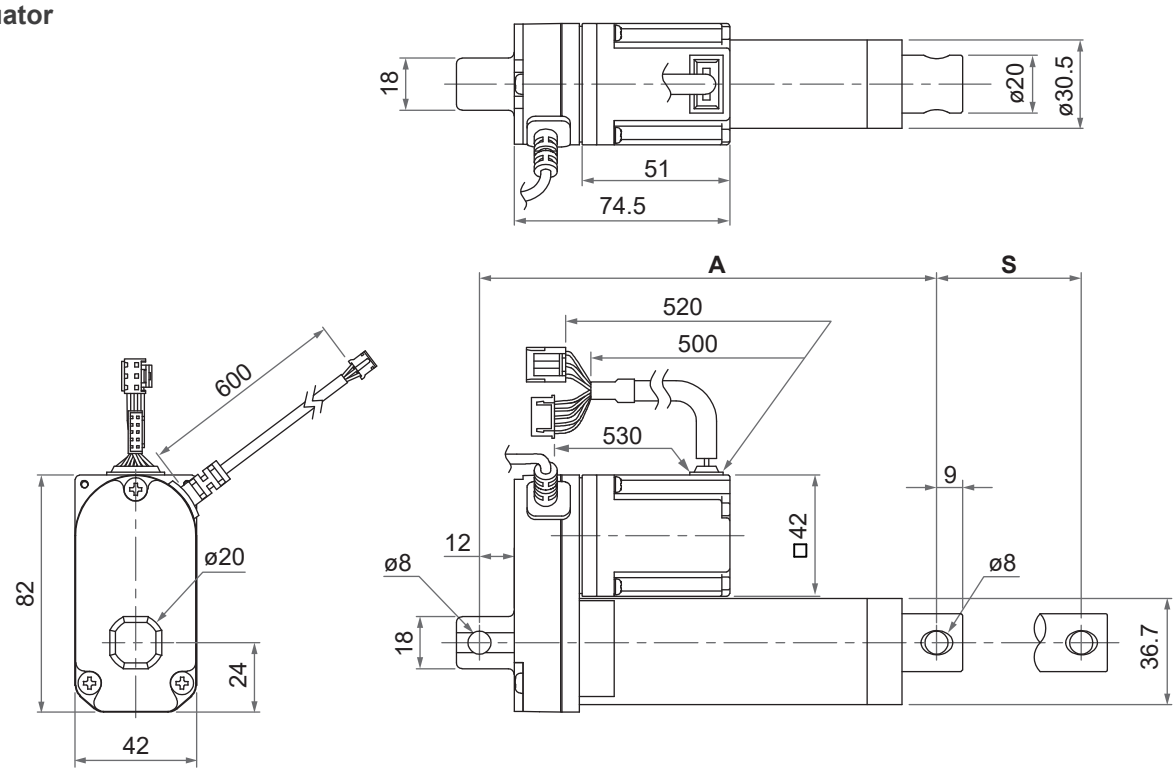

● **Mounting bracket (MB22)**

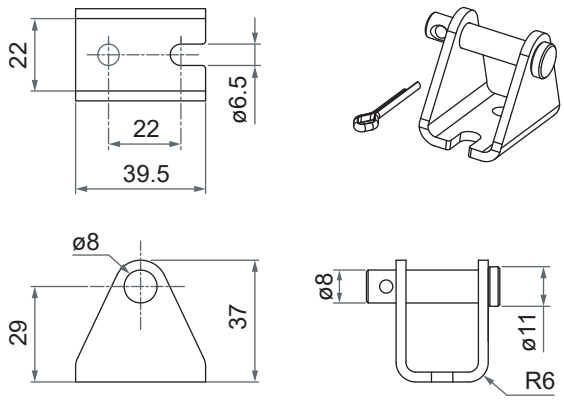

Installation Dimension

● Retracted length (A)

Front connector code	Stroke (S)				
	100	150	200	250	300
1	209	260	311	362	413
3	250	301	352	403	454
6	219.5	270.5	321.5	372.5	423.5

Extended length (B) = S + A
(tolerance: ±3mm)

● Front connector

1: Drilled hole

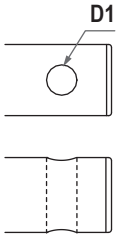

3: Spherical rod eye

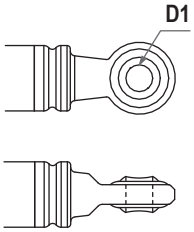

6: Plastic slot

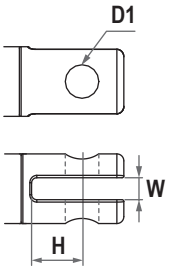

Front connector code	Diameter of pivot without bushing (D1)	Slot width (W)	Slot depth (H)
1	ø6.4, ø8, ø10	N/A	N/A
3	ø8	N/A	N/A
6	ø8, ø10	6	15

● Rear connector

1: Zinc alloy clevis

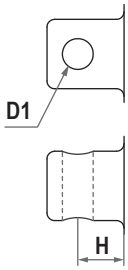

C: Clamp

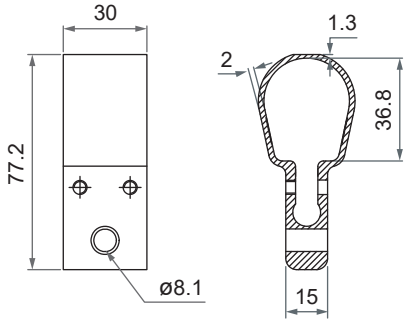

● Pivot orientation of rear connector

0: 0°

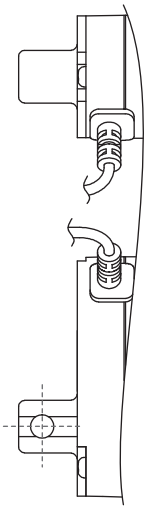

9: 90°

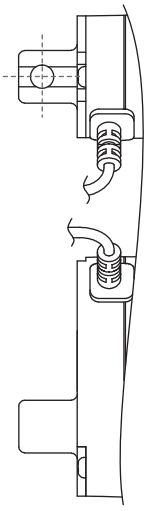

Rear connector code	Diameter of pivot without bushing (D1)	Slot width (W)	Slot depth (H)
1	ø6.4, ø8, ø10	N/A	12

Compatibility

Product	Model	Application condition	LD3L spec
Control box	T-control, CS1, CS2, CBT2, CB3T, CB4M	- Stable output voltage 24~33V DC, without PWM. - Without positioning sensor feedback	- 4-Pin Moteck F-type DIN plug

Connection Diagram:

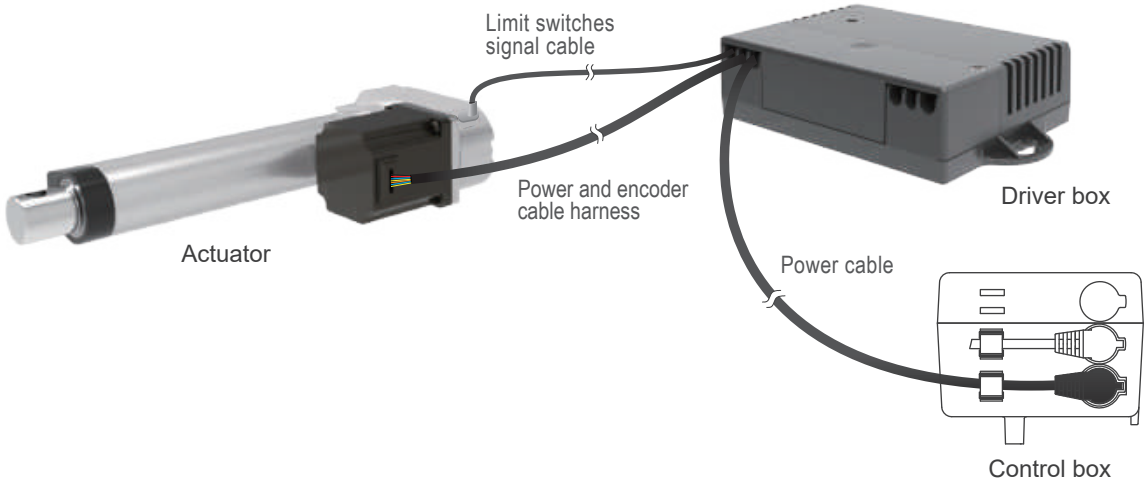

Power Cable

- **Moteck F-type DIN Plug**

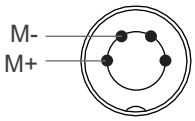

4-pin DIN Plug

F-type

- **Bare wires**

Wire color	Definition
Red	M+
Black	M-

Note: Connect (M+) to '+' & (M-) to '-' of DC power, the actuator will extend.

Ordering Key

LD3L- 24 3 3 - 10 - 100 - 1 1 0 0 0 0 1

Input voltage	**24**: 24V DC
Motor	**3**: 30W
Spindle type	**3**: 3mm
Gear ratio	**10**: 10:1 **40**: 40:1 (Refer to Page 2)
Stroke	**100**: 100mm **150**: 150mm **200**: 200mm **250**: 250mm **300**: 300mm
Front connector	**1**: Drilled hole **3**: Spherical rod eye **6**: Plastic slot (Refer to Page 4)
Rear connector	**1**: Metal **C**: Clamp (Refer to Page 4)
Pivot orientation of rear connector	**0**: 0° (Standard) **9**: 90° (Refer to Page 4)
Reserved	**0**: No meaning
Reserved	**0**: No meaning
Mounting bracket (MB22)	**0**: None **1**: Mounting bracket x 1 **2**: Mounting bracket x 2 (Refer to Page 3)
Power cord	**1**: 900mm straight

Terms of Use
The user is responsible for application suitability of Moteck products. As ongoing improvement process continues, products listed on the Moteck website are subject to change without prior notice. Moteck reserves the right to terminate the sales or remove any product displayed on the website, or listed in its catalogues.

©2020 Aug. MOTECK. MO-T-0131 Version: 1.3